header

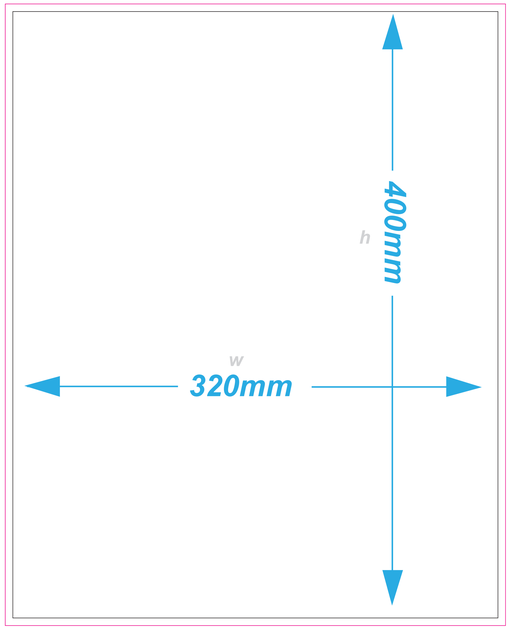

Base

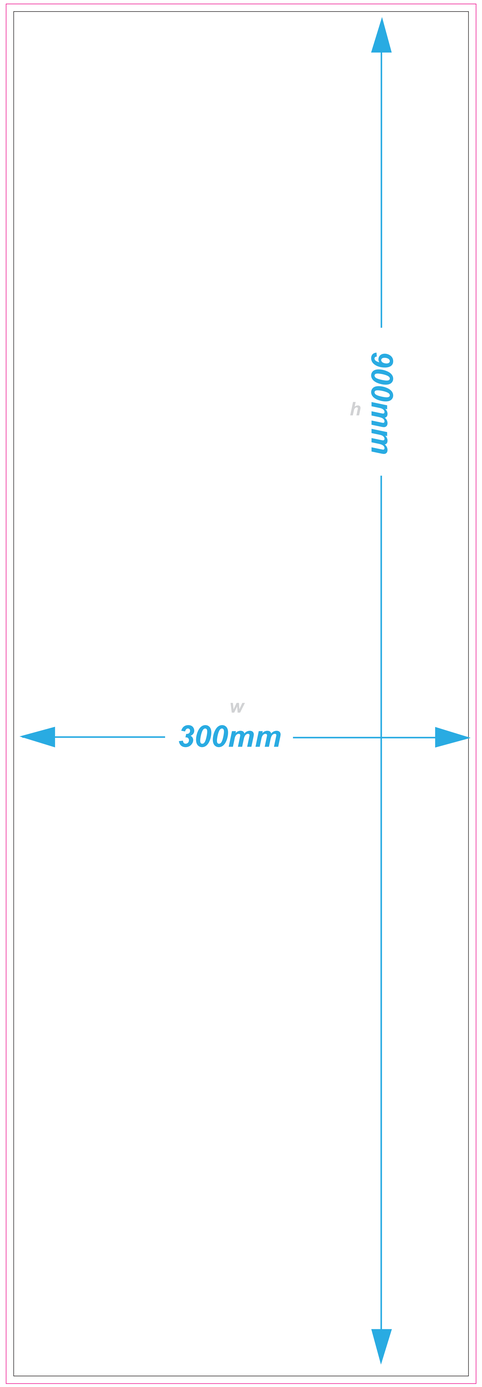
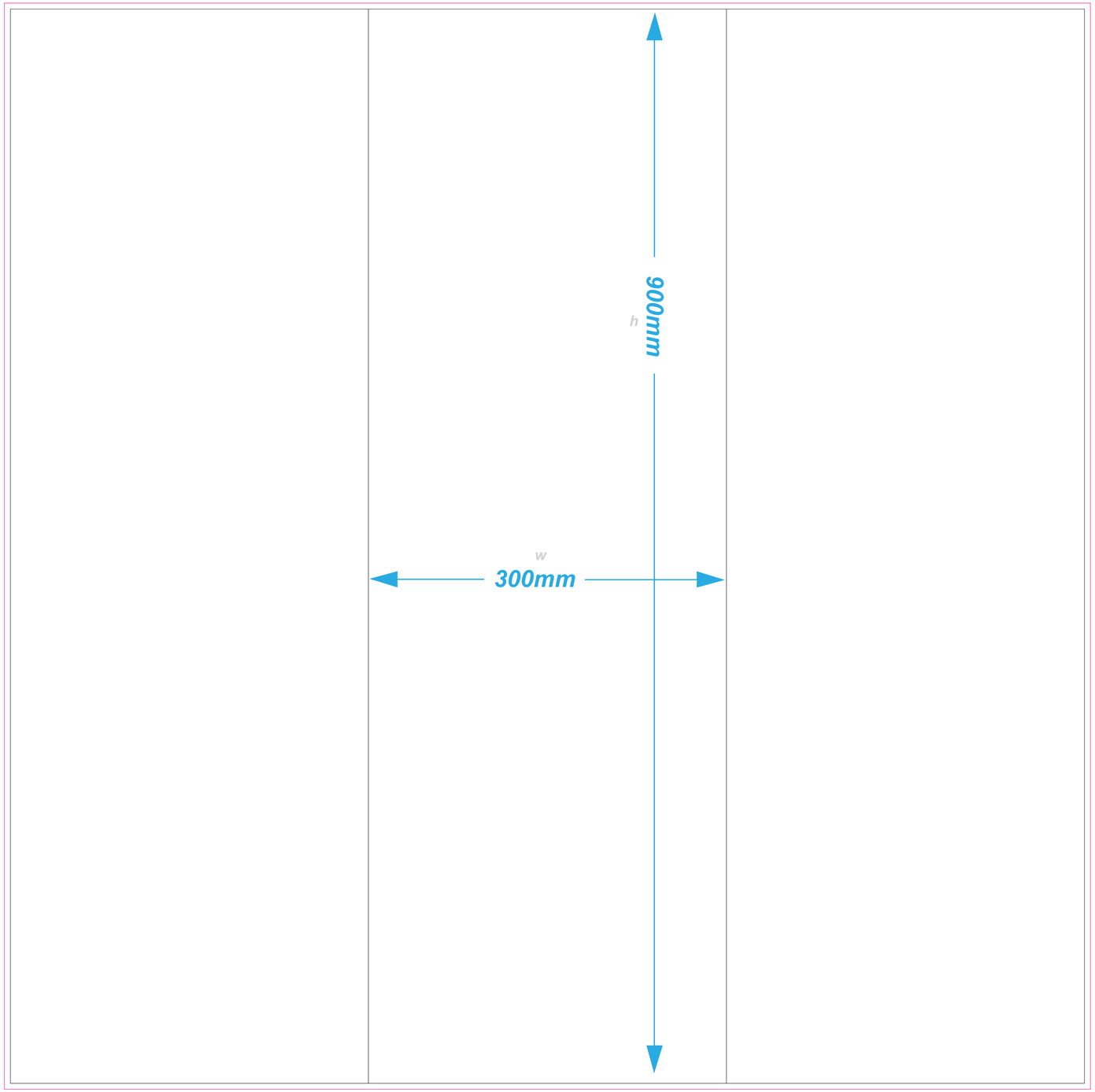
Base